Case :Embedment

1.	2.
3.	4.

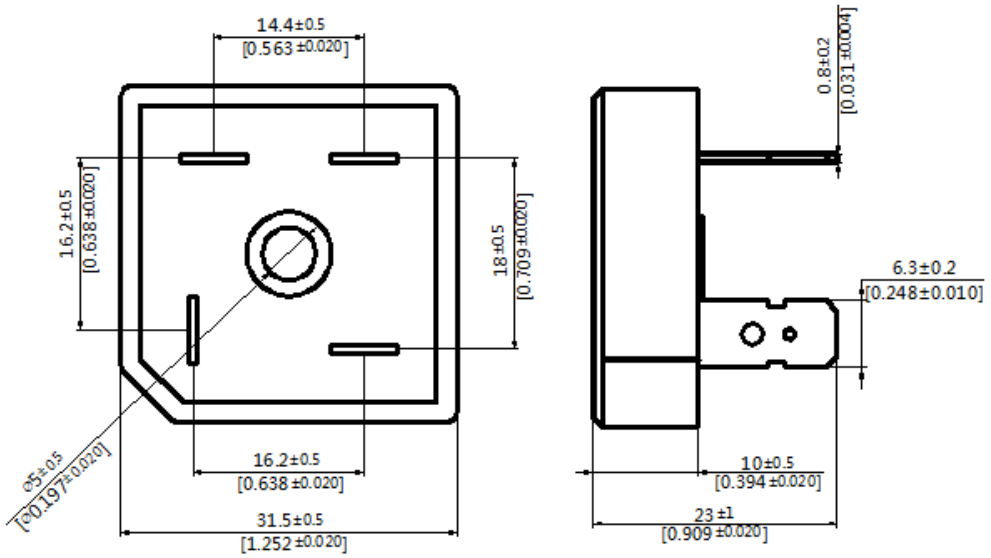
14.4±0.5
[0.563±0.020]
16.2±0.5
[0.638±0.020]
18±0.5
[0.709±0.020]
ø5±0.5
[ø0.197±0.020]
16.2±0.5
[0.638±0.020]
31.5±0.5
[1.252±0.020]
0.8±0.2
[0.031±0.004]
6.3±0.2
[0.248±0.010]
10±0.5
[0.394±0.020]
23±1
[0.909±0.020]

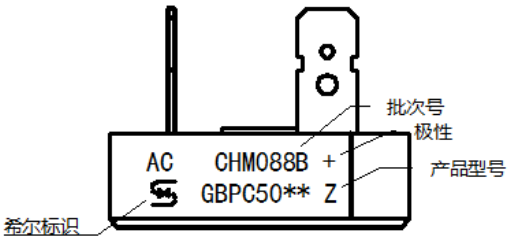
批次号
极性
产品型号
AC
CHM088B +
GBPC50** Z
希尔标识